Total Synthesis of Platencin

K. C. Nicolaou, G. Scott Tria, D. J. Edmonds, *Angew. Chem. Int. Ed.* **2008**, *47*, 1780–1783.

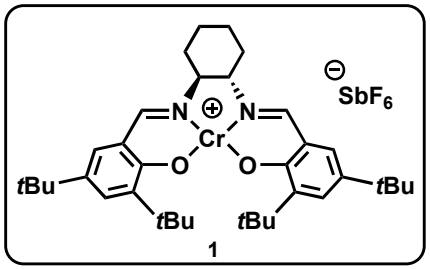

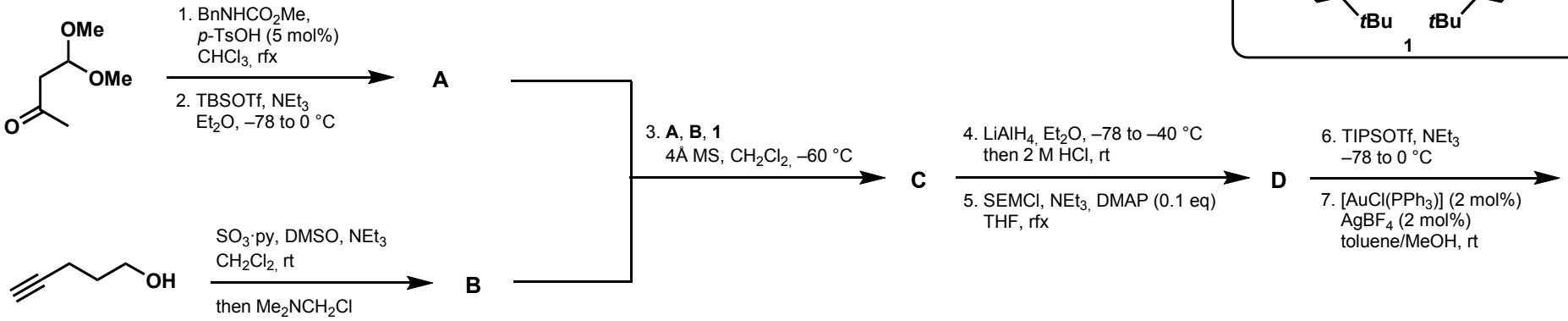

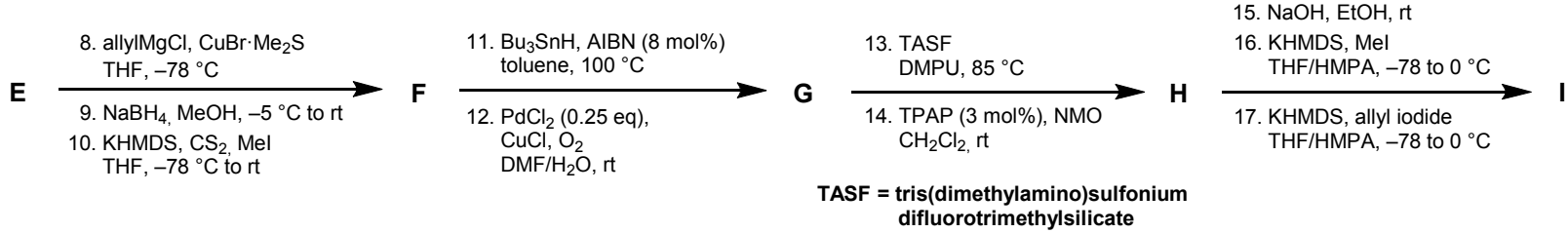
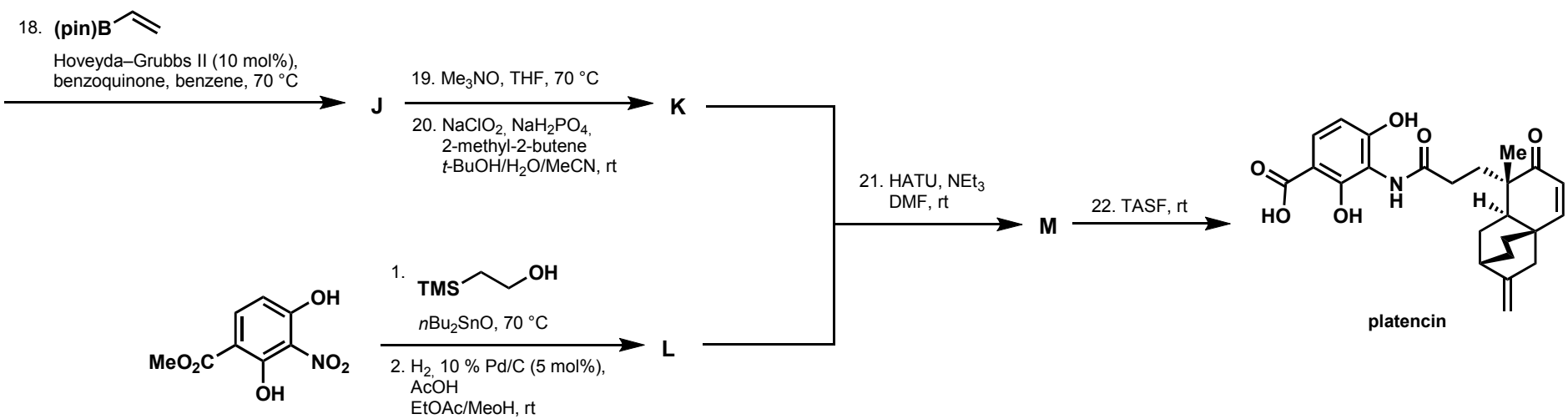
TASF = tris(dimethylamino)sulfonium difluorotrimethylsilicate